Hanwha Vision

# NETWORK THERMAL CAMERA

## Quick Guide

TNM-C4940TD
TNM-C4950TD
TNM-C4952TD
TNM-C4960TD
TNM-C4962TD
TNM-C4940TDR
TNM-C4942TDR

CE

**Important**
Please check 'Manuals' from our website, before connecting to the Supply,
https://www.hanwhavision.com/en/download-data/

**Warranty**
Please check "Product warranty information" from our website.
https://www.hanwhavision.com/en/support/warranty/

We recommend to use the officially compatible VMS version or latest Hanwha NVR version when integrating with VMS or Hanwha NVR.

The Risk Group 1 of a LEDs include in the equipment, so should be attached RG1 warning label at the end-product.

eco
RoHS compliant

Hanwha Vision cares for the environment at all product manufacturing stages, and is taking measures to provide customers with more environmentally friendly products.
The Eco mark represents Hanwha Vision's devotion to creating environmentally friendly products, and indicates that the product satisfies the EU RoHS Directive.

**Correct Disposal of This Product** (Waste Electrical & Electronic Equipment)

(Applicable in the European Union and other European countries with separate collection systems)

This marking on the product, accessories or literature indicates that the product and its electronic accessories (e.g. charger, headset, USB cable) should not be disposed of with other household waste at the end of their working life. To prevent possible harm to the environment or human health from uncontrolled waste disposal, please separate these items from other types of waste and recycle them responsibly to promote the sustainable reuse of material resources.

Household users should contact either the retailer where they purchased this product, or their local government office, for details of where and how they can take these items for environmentally safe recycling.

Business users should contact their supplier and check the terms and conditions of the purchase contract. This product and its electronic accessories should not be mixed with other commercial wastes for disposal.

**Correct disposal of batteries in this product**

(Applicable in the European Union and other European countries with separate battery return systems.)

This marking on the battery, manual or packaging indicates that the batteries in this product should not be disposed of with other household waste at the end of their working life. Where marked, the chemical symbols Hg, Cd or Pb indicate that the battery contains mercury, cadmium or lead above the reference levels in EC Directive 2006/66. If batteries are not properly disposed of, these substances can cause harm to human health or the environment.

To protect natural resources and to promote material reuse, please separate batteries from other types of waste and recycle them through your local, free battery return system.

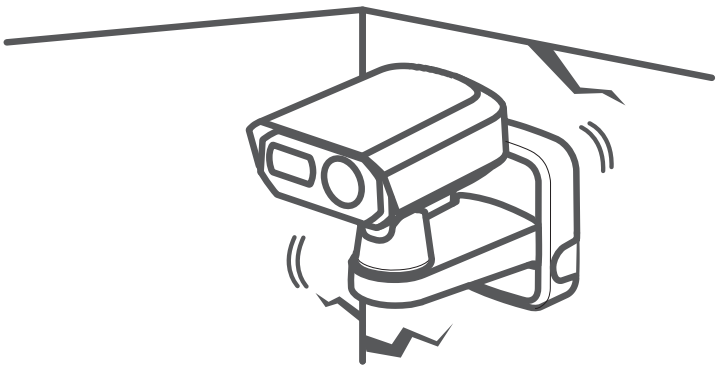

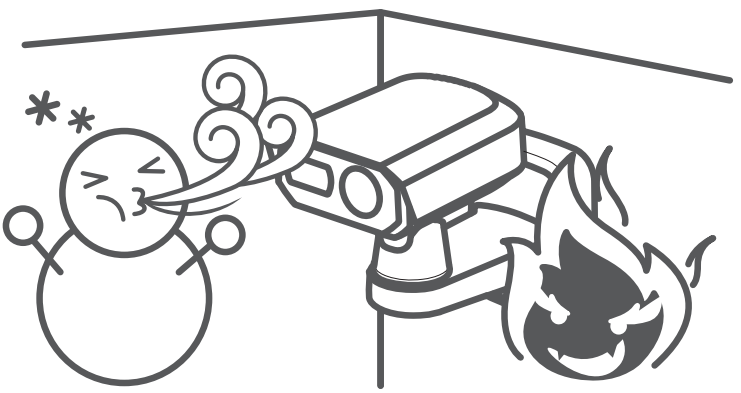

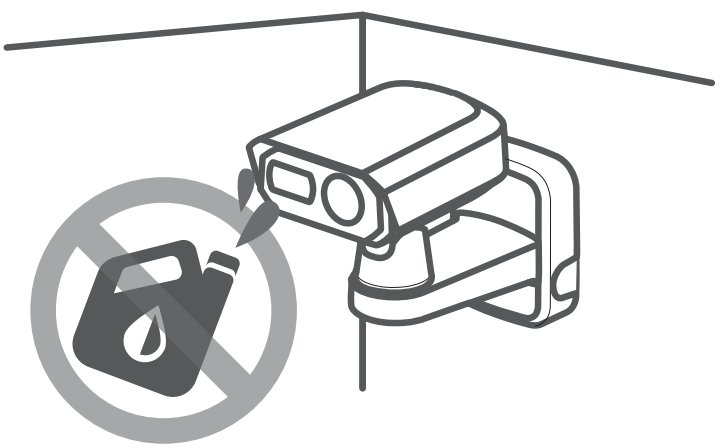

# COMPONENT

As for each sales country, accessories are not the same.

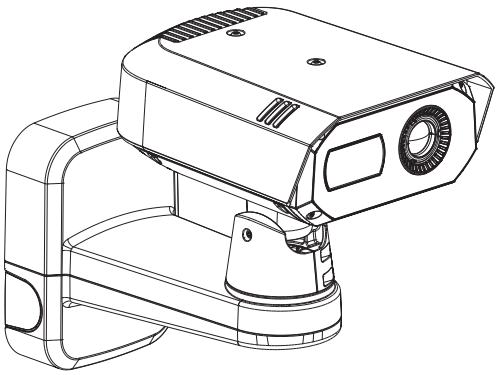

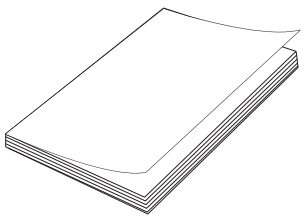

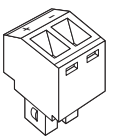

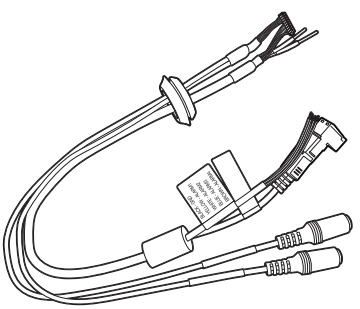

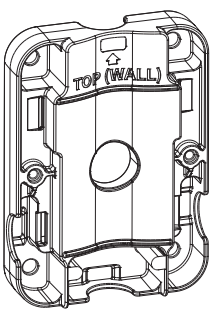


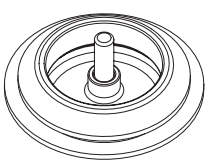

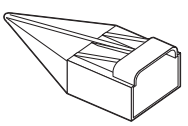

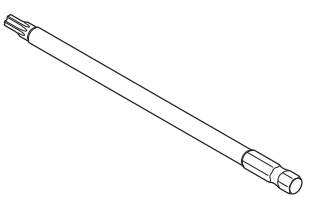

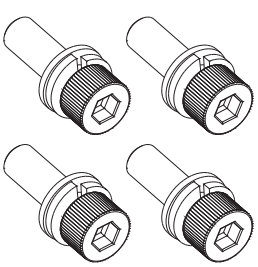

# INSTALLATION

1

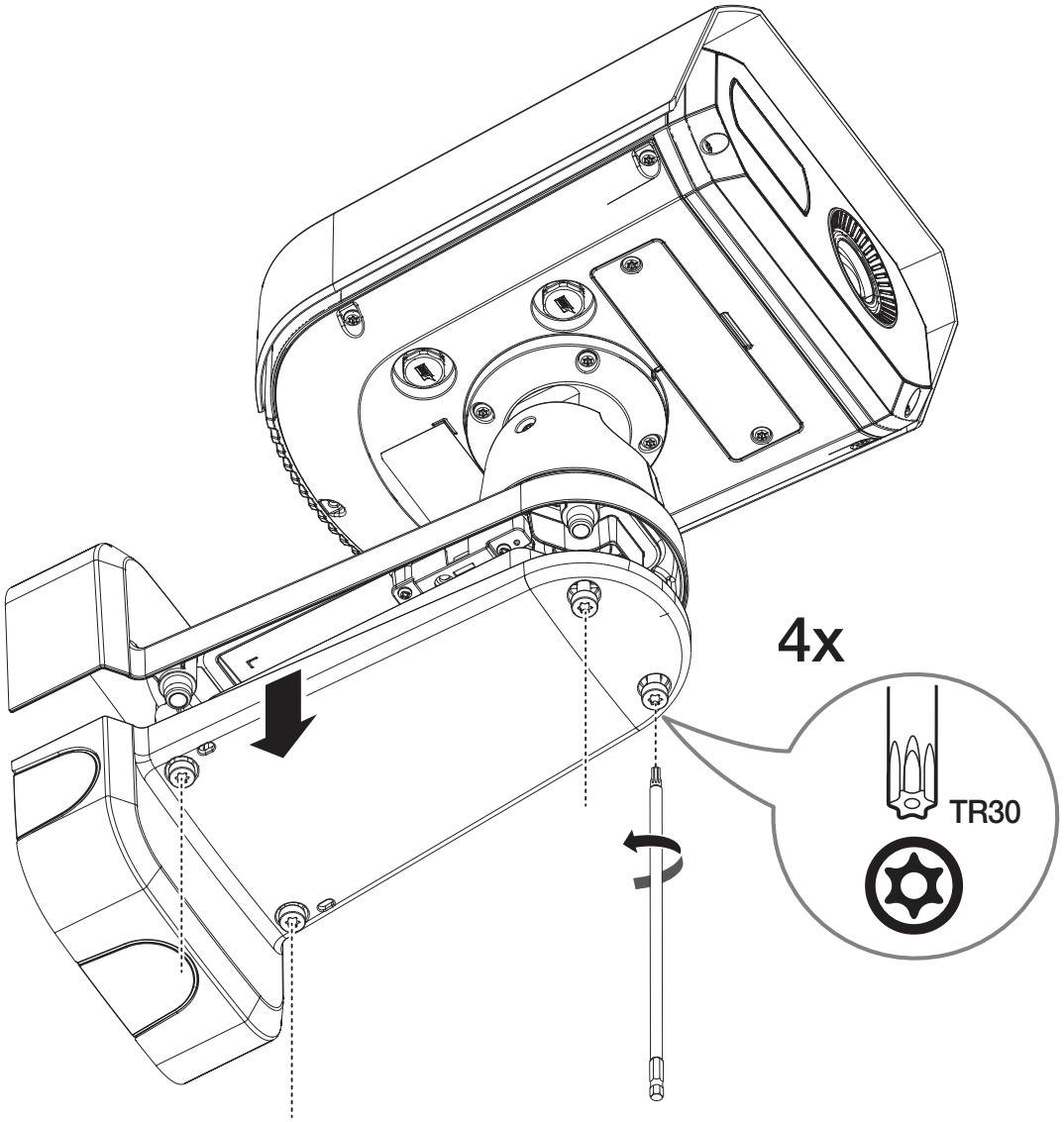

# INSTALLATION

## 2-1-1

- When installing on a wall

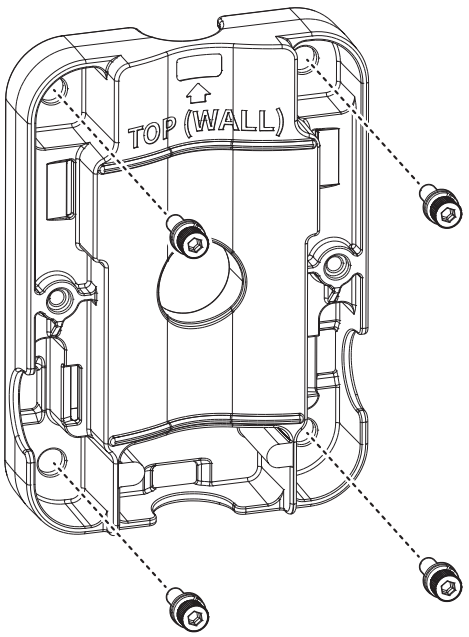


## 2-1-2

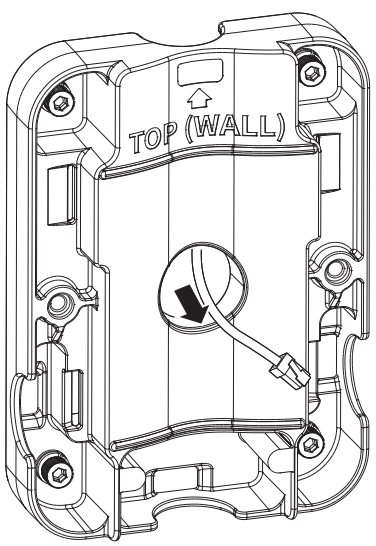

# INSTALLATION

**2-2-1** • When installing on a pole (Not Included Stainless steel mount strap)

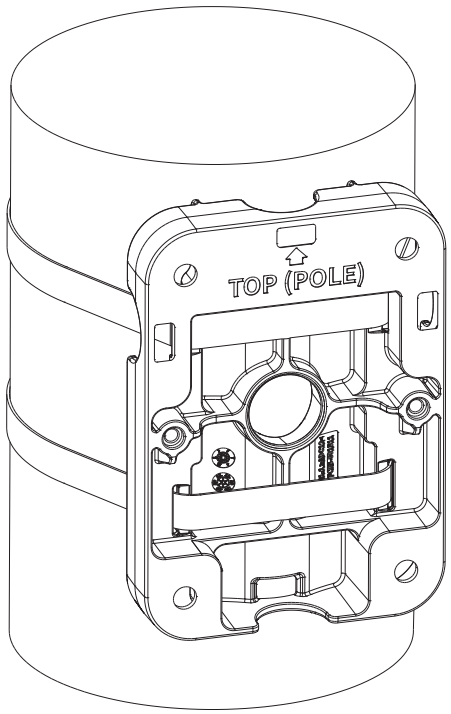


**3**

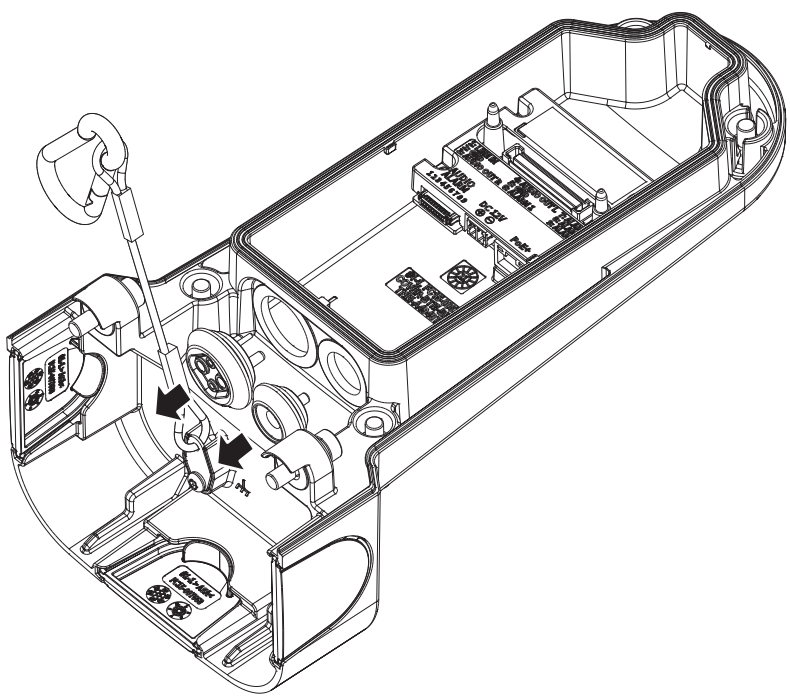

4

- Installing network cable (IP66)

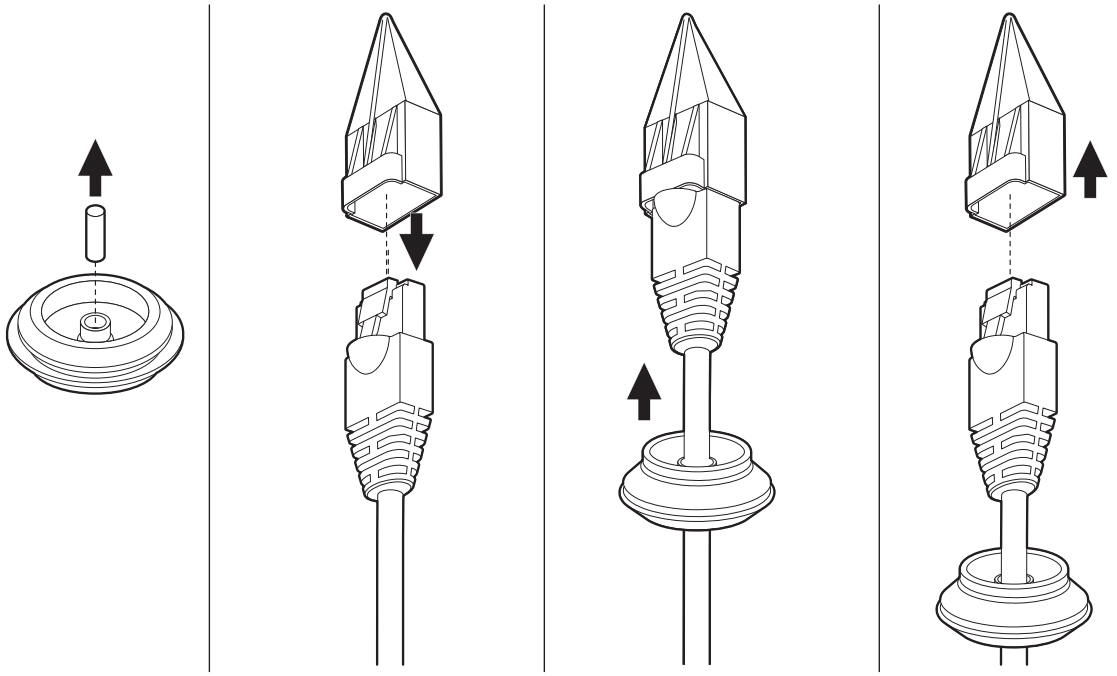

5

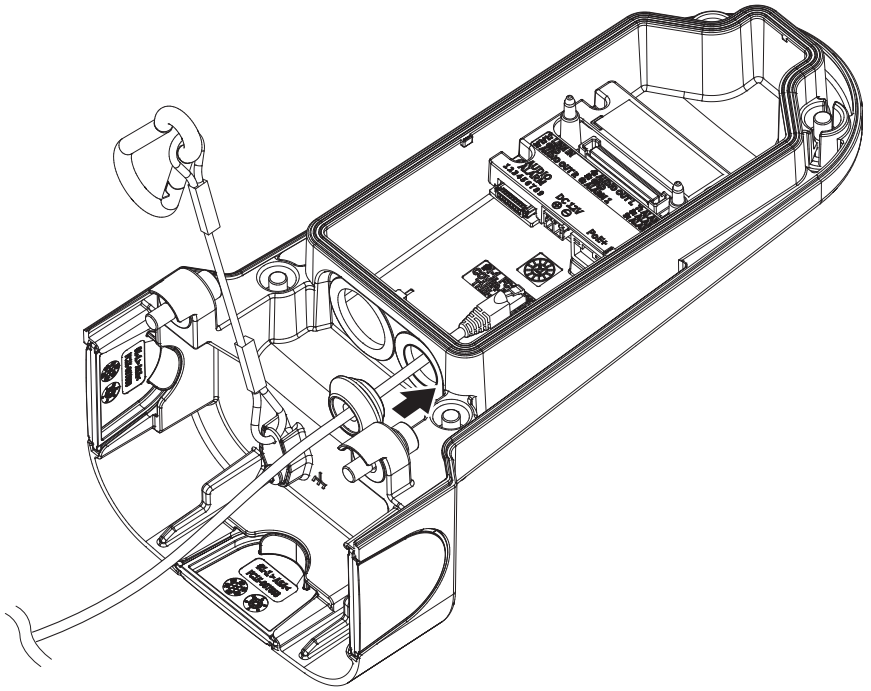

6

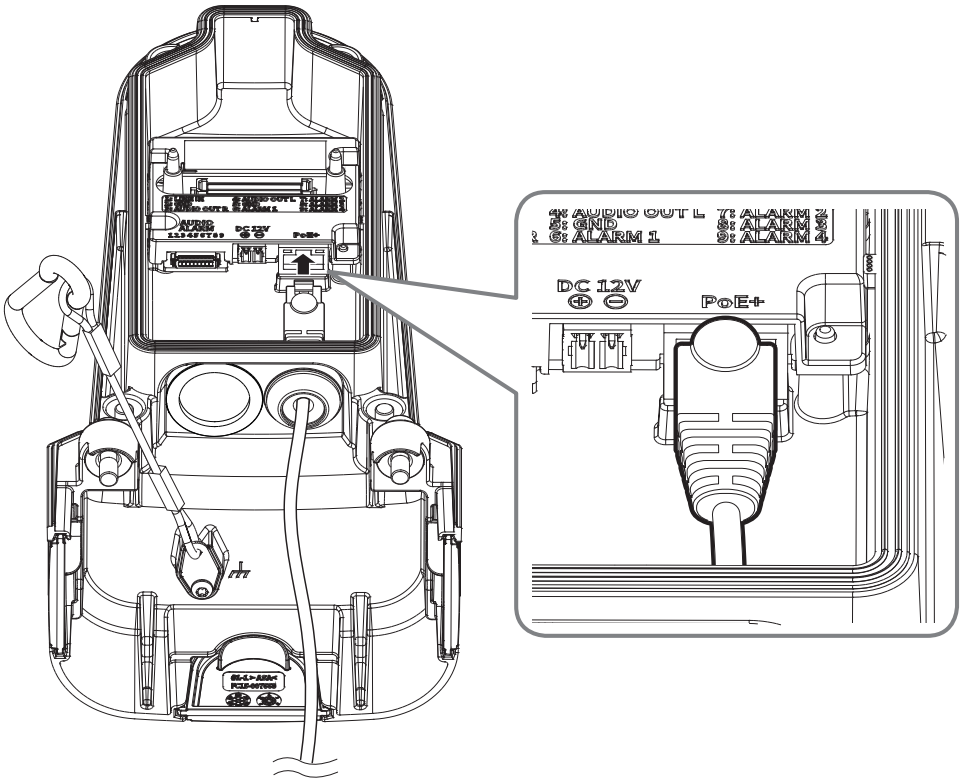


7

- Installing audio/alarm cables

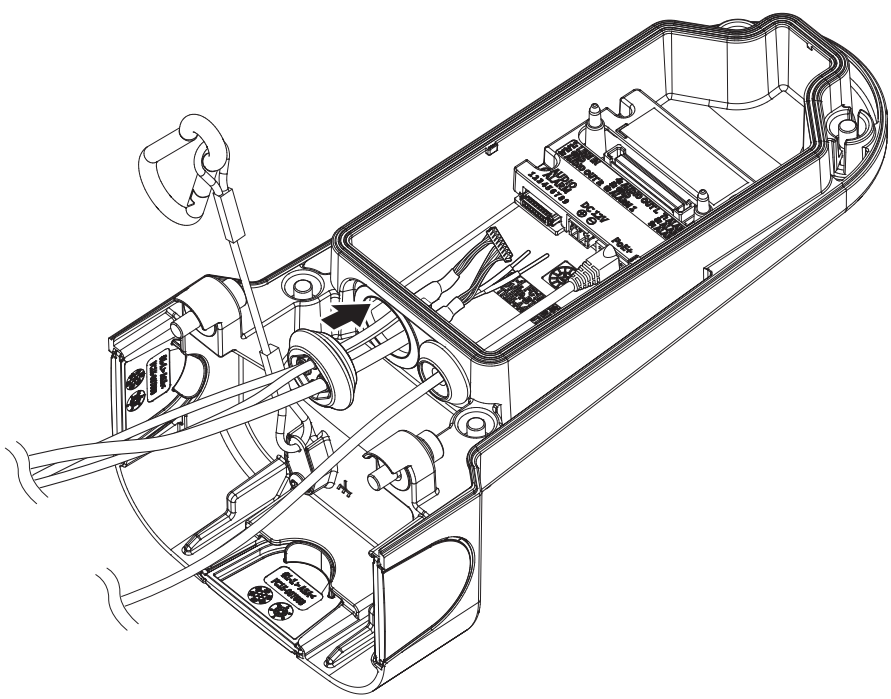

8

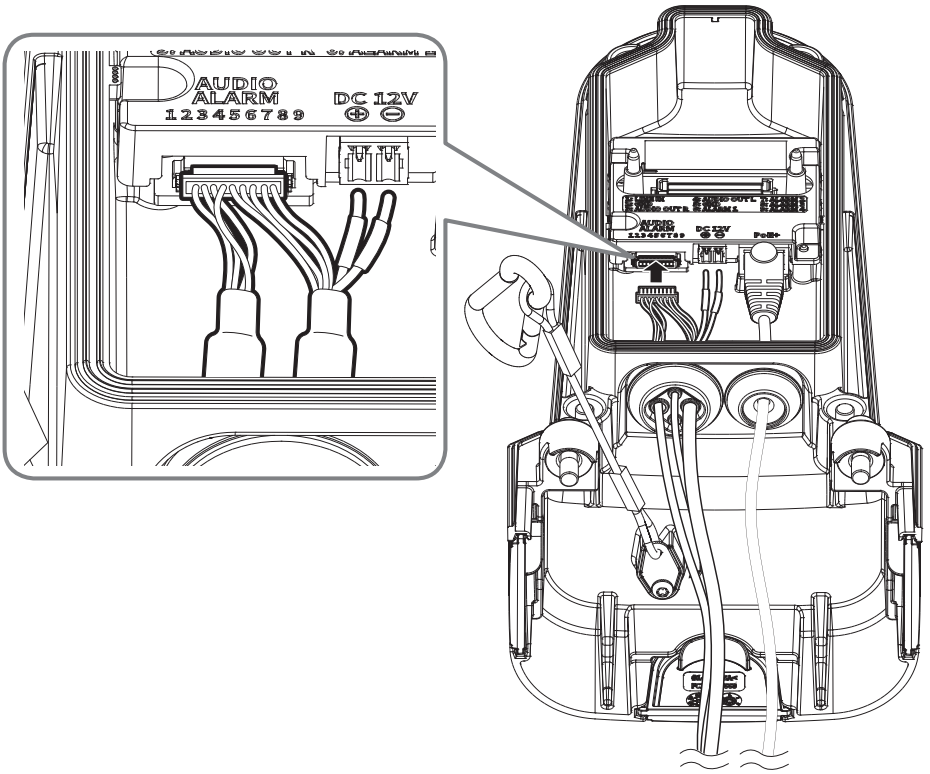


9

- When connecting DC 12V Power cables

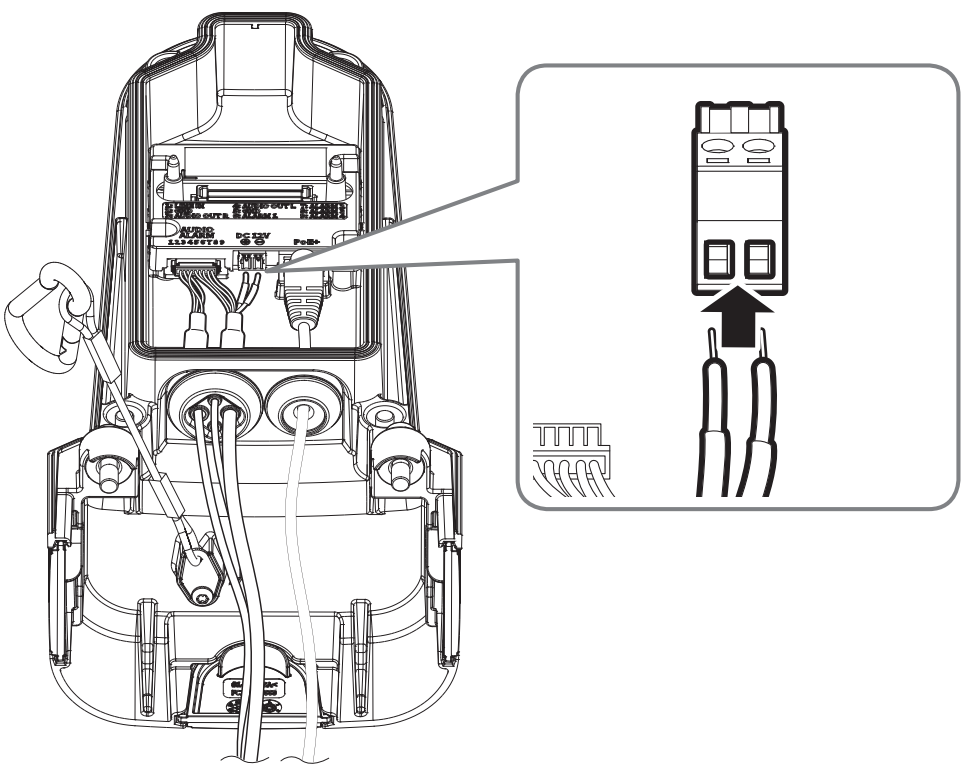

10

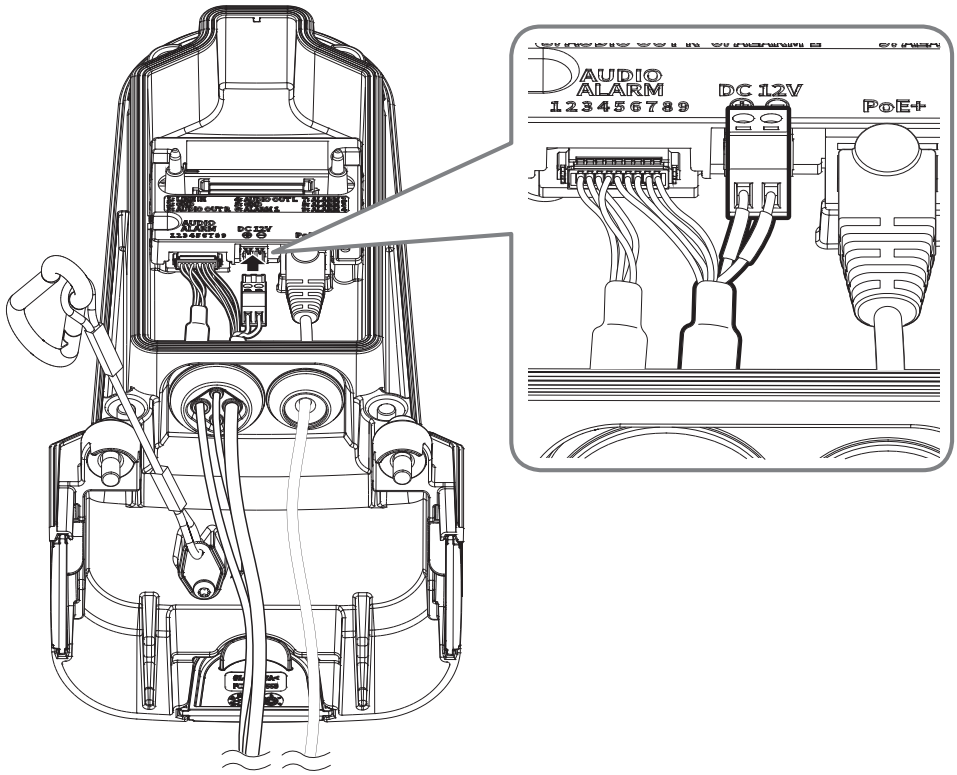


11

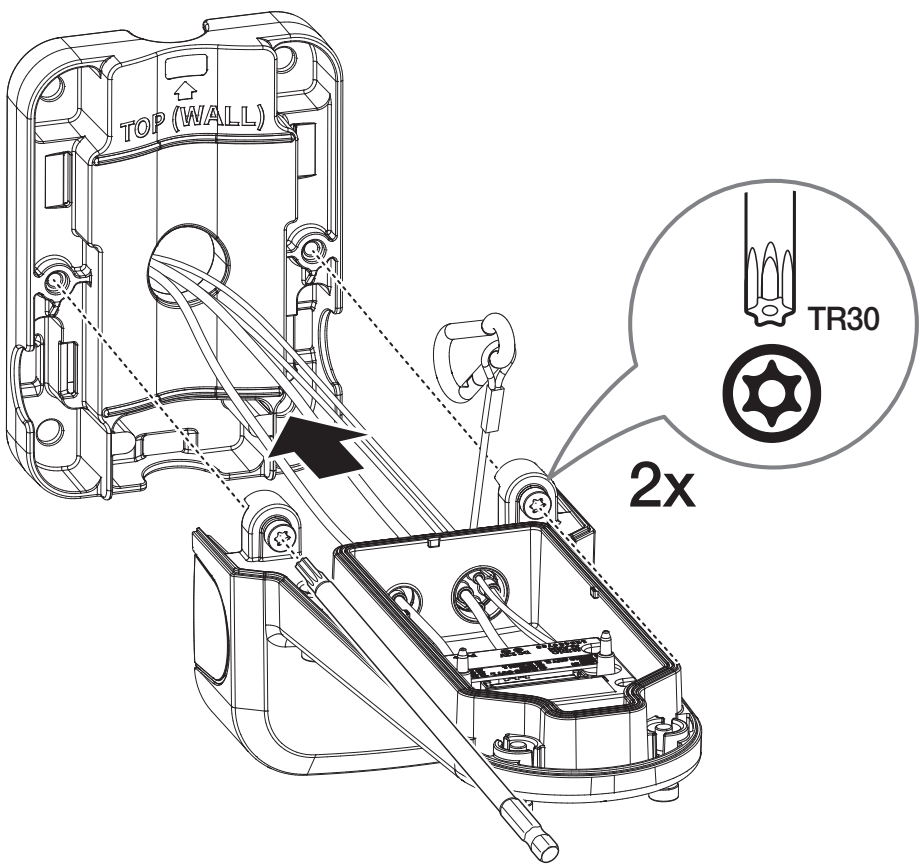

12

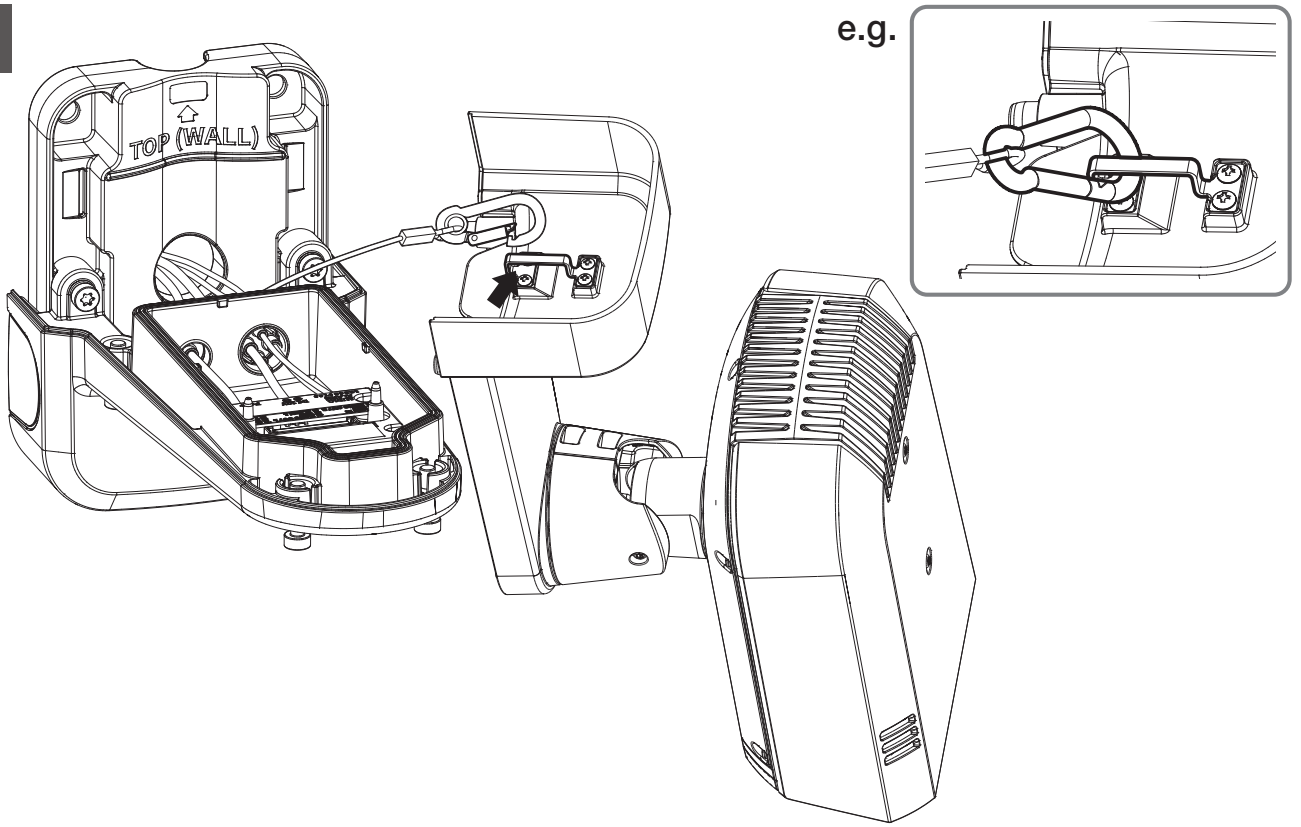


13

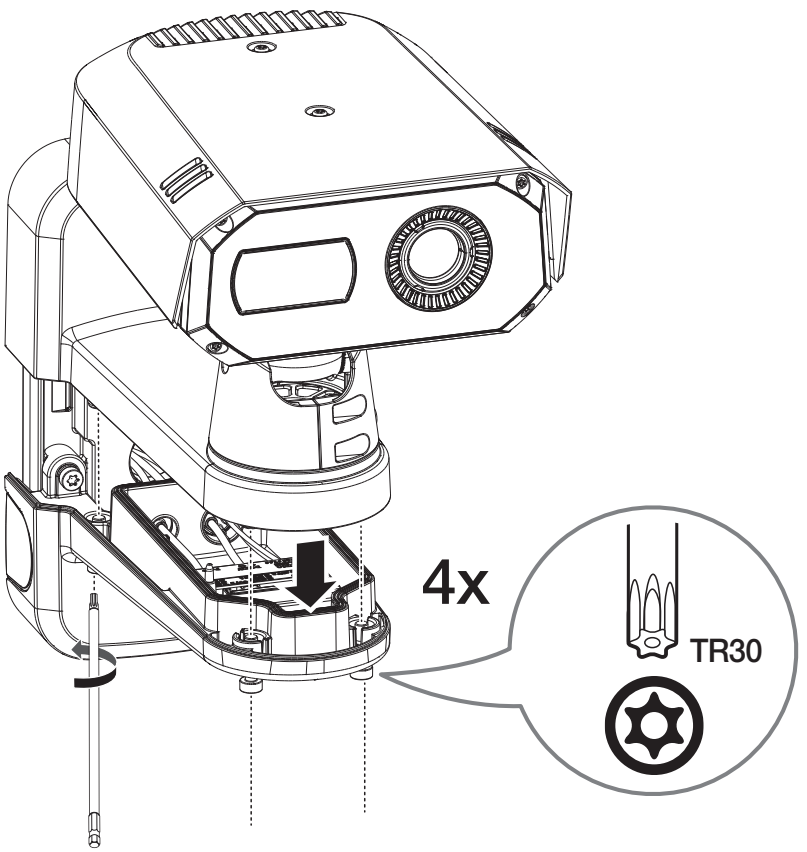

14

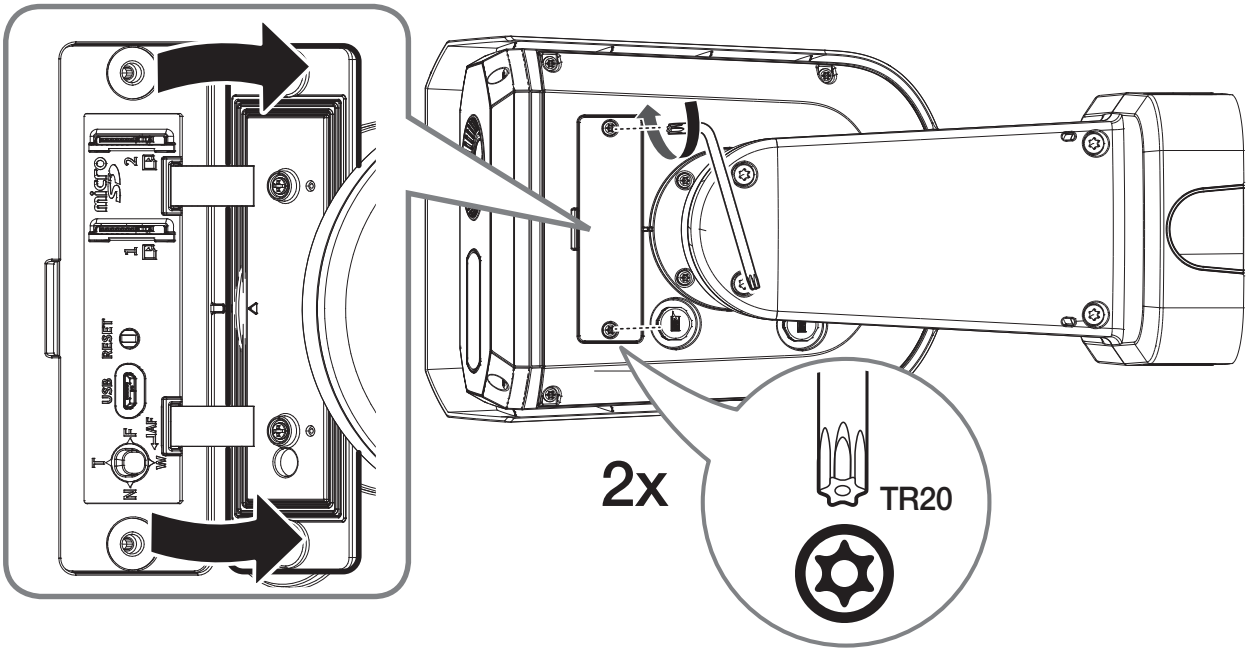


15

- Not Included : Micro SD Card

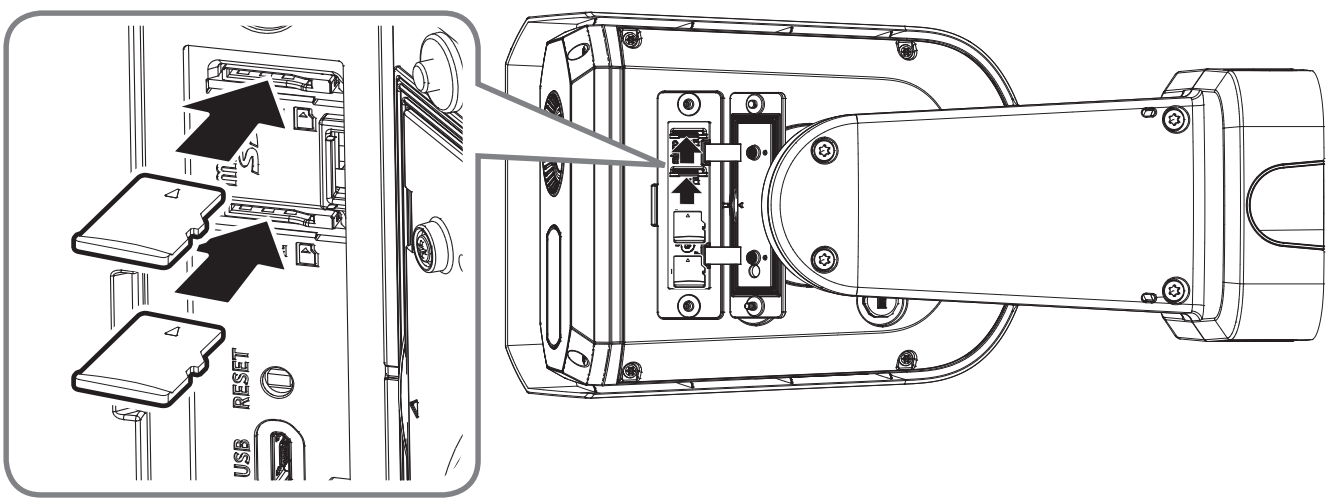

## 16

- Not Included : Wi-Fi dongle, OTG adapter

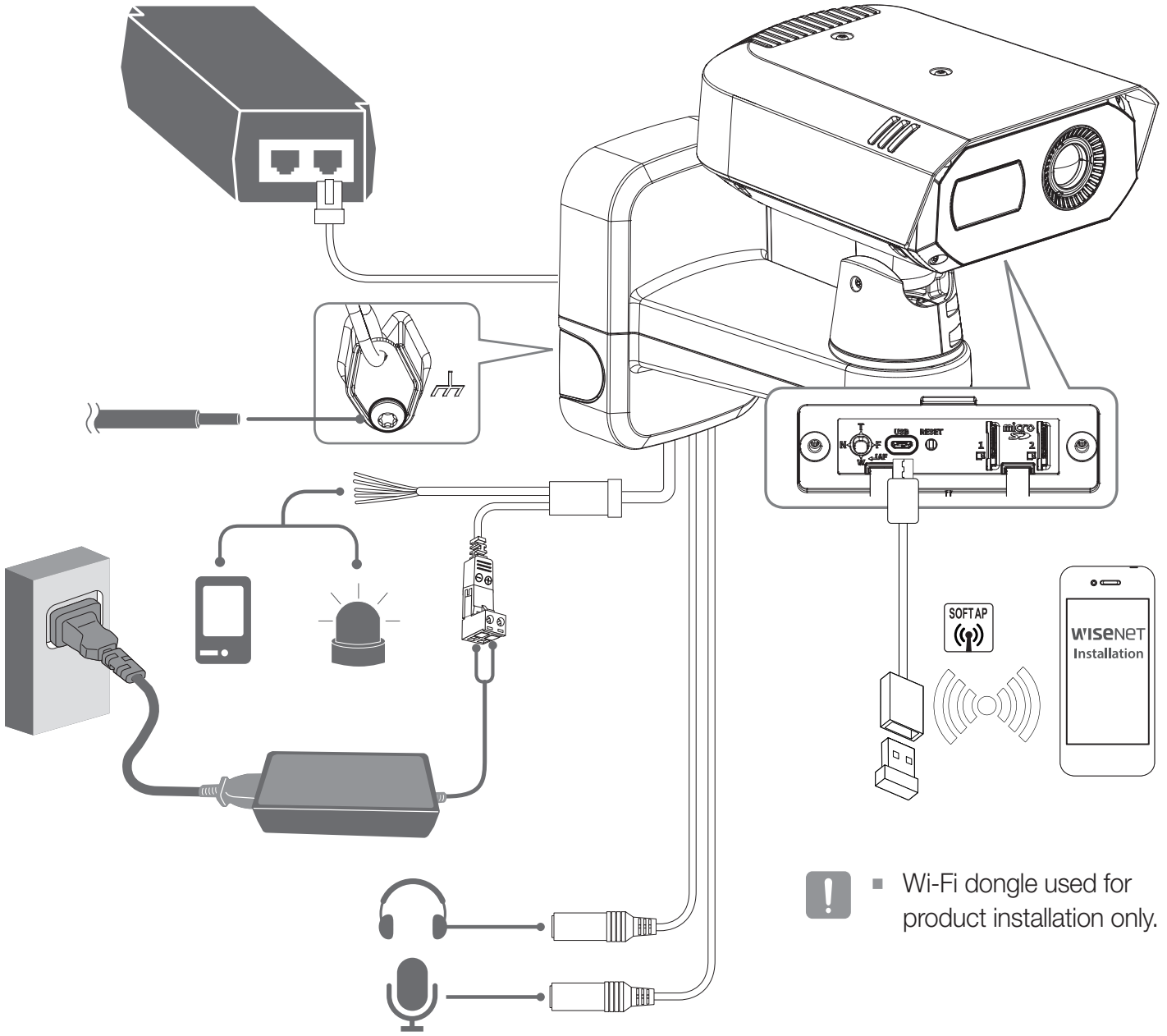


- Wi-Fi dongle used for product installation only.

17

18

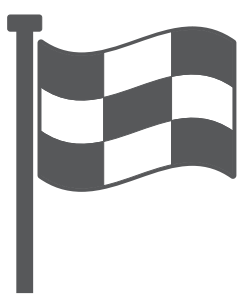

# PASSWORD SETTING

When you access the product for the first time, you must register the login password.

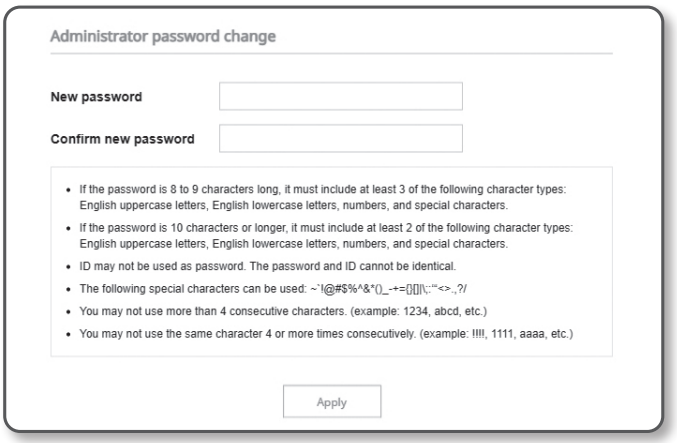


- For a new password with 8 to 9 digits, you must use at least 3 of the following: uppercase/ lowercase letters, numbers and special characters. For a password with 10 to 15 digits, you must use at least 2 types of those mentioned.
  - Special characters that are allowed. : ~`!@#$%^&*()_-+={}[]|\;:'"<>.,?/
- Space is not allowed for password.
- For higher security, you are not recommended to repeat the same characters or consecutive keyboard inputs for your passwords.
- Be sure to remember the password you set, as you will need to reset the product by pressing the [**RESET**] button if you lose your password.

# LOGIN

Whenever you access the camera, the login window appears.
Enter the User ID and password to access the camera.

1. Enter "**admin**" in the <**User Name**> input box.
2. Enter the password in the <**Password**> input field.
3. Click [**Sign in**].

# CONNECTING TO WiFi

## Camera setting

1. Connect OTG adapter (5-pin) and Wi-Fi dongle to the micro USB terminal.

## Smartphone setting

1. Install the Wisenet Installation application.
2. Select the camera SSID after turning on the WiFi.
3. Run the Wisenet Installation application.
4. When you log in to the camera, the video will be connected.
5. You can adjust angle of view while watching the video through smartphone.

HEVC Advance™
Covered by patents at patentlist.accessadvance.com

microSD, microSDHC, and microSDXC Logos are trademarks of SD-3C LLC. microSD, microSDHC, microSDXC are trademarks or registered trademarks of SD-3C, LLC in the United States, other countries or both.

EAC

Подлежит использованию по назначению
в нормальных условиях
Срок службы : 7 лет.

## Türkiye Distribütörü

**EDS Elektronik Destek Sanayi ve Ticaret Ltd. Şti.**
Meclis Mah. Teraziler Cad. Hayran Sk. (Eskisi Kılıç Sk.) No: 4 Sancaktepe / İstanbul / Türkiye
Tel +90.216.313.25.15

**ENTES ELEKTRONİK CİHAZLAR İMALAT VE TİC. A.Ş.**
Dudullu Org.San.Bölg. 1. Cad. No:23 34776 Ümraniye / İstanbul / Türkiye
Tel +90.216.313.01.10

**TEKNOMAKS TEKNOLOJI / TEKNOMAKS BILISIM**
MERDİVENKÖY MAH.DİKYOL SOK. BUSINESS ISTANBUL No:2, Kat:7, D:B67, 34732 Kadıköy / İstanbul / Türkiye
Tel +90.212.217.54.22

Cihazın Ticaret Bakanlığınca önerilen ortalama ömrü
Cihazın EEE yönetmeliklerine uygun olduğuna benzer beyan

Hanwha Vision